FAGOR PROFESSIONAL



Washers

We care about what really matters

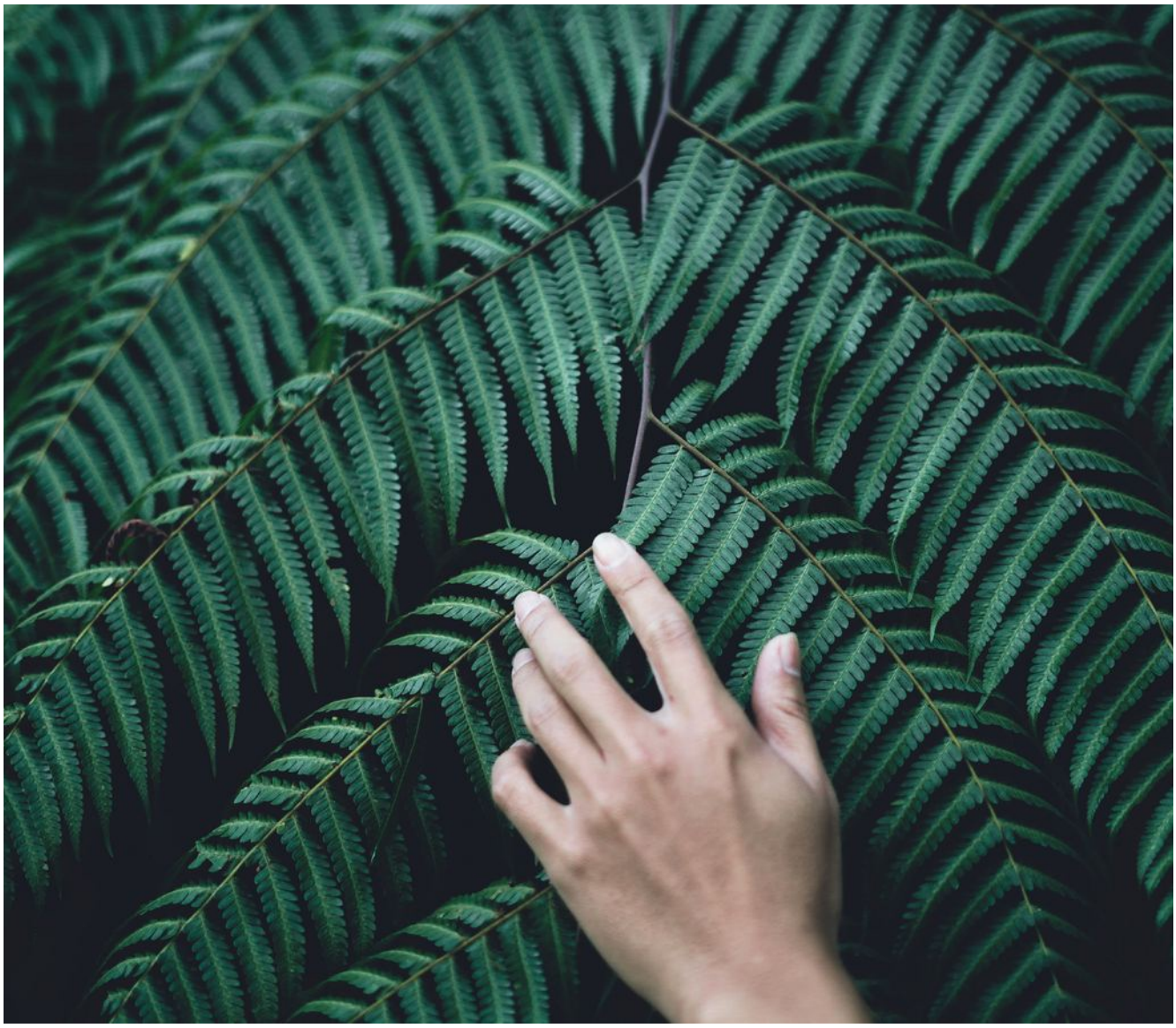

Protecting you is protecting the environment

kare GENERATION

Introducing Kare, the new generation of Fagor Professional laundry equipment. A complete and advanced series of machines designed to offer you the best solution, one that takes care of what matters most: you and the world around you. Because Kare is conceived and designed to protect both your clothing and the environment.

Through this generation, we have made sure that the best technological innovations are available to you, such as the new smart, easy-to-use control which guarantees optimum care for your clothes. Ergonomic machines with components that make use and proper maintenance easy. We believe that caring for you is being there for you whenever you need us, wherever you are.

A generation designed with you in mind, with a complete and precise set of features that will provide you with the exceptional water and energy efficiency you are looking for. Because Kare knows that protecting you is protecting the planet.

A solution for every customer

At Fagor Professional we adapt to the needs of each user, offering a wide range of options.

High Spin | **G-force 500** (LA-22/28/35C/45C G-force 450)
Small and medium capacity

TYPE OF CONTROL	HEATING	CAPACITY						
		10-11 kg	13-14 kg	18-20 kg	22-25 kg	28-31 kg	35-39 kg	45-50 kg
Touch Plus Control (TP2)	Electric, hot water and steam	LA-11 TP2	LA-14 TP2	LA-18 TP2	LA-22 TP2	LA-28 TP2	LA-35C TP2	LA-45C TP2
Touch Plus Control (TP2) Self-service	Electrical and hot water	LA-11 TP2	LA-14 TP2	LA-18 TP2	LA-22 TP2	LA-28 TP2	LA-35C TP2	LA-45C TP2

High Spin | **G-force 450** (LA-100C/120C G-force 350)
Large capacity

TYPE OF CONTROL	HEATING	CAPACITY			
		59-65 kg	77-85 kg	95-105 kg	115-130 kg
Touch Plus Control (TP2)	Electrical*, hot water and steam	LA-60C TP2	LA-80C TP2	LA-100C TP2	LA-120C TP2

*There is no electrical heating in LA-100C and LA-120C models.

Standard Spin | **G-force 200**
Small and medium capacity

TYPE OF CONTROL	HEATING	CAPACITY						
		10-11 kg	13-14 kg	18-20 kg	22-25 kg	28-31 kg	35-39 kg	45-50 kg
Touch Plus Control (TP2)	Electric, hot water and steam	LN-11 TP2	LN-14 TP2	LN-18 TP2	LN-22 TP2	LN-28 TP2	LN-35C TP2	LN- 45C TP2
Touch Plus Control (TP2) Self-service	Electrical and hot water	LN-11 TP2	LN-14 TP2	LN-18 TP2	LN-22 TP2	LN-28 TP2	LN-35C TP2	LN- 45C TP2

Standard Spin | **G-force 150**
Large capacity

TYPE OF CONTROL	HEATING	CAPACITY	
		59-65 kg	77-85 kg
Touch Plus Control (TP2)	Electric, hot water and steam	LN-60C TP2	LN-80C TP2
Touch Plus Control (TP2) Self-service	Electrical and hot water	LN-60C TP2	LN-80C TP2

"LA" Range

High spin speed

G-force
500 / 450 / 350



Characteristics

- Floating washers with high-speed spin.
- G-force: 350 to 500.
- Spin speed between 678 and 1300 rpm.
- Drum and envelope in AISI-304 stainless steel.
- Easy to install, no floor fixings required and reduced costs.
- Aesthetic stainless steel skinplate exterior construction.
- 7" Touch Plus Control TP2.
- 3 water inlets.
- 8 liquid dosing signals.
- **FagorKonnect** / Standard IoT connectivity.
- Energy savings in the drying process due to high water extraction (final residual moisture of 45%).

"LN" Range

Normal spin speed

G-force
200 / 150



Characteristics

- Hard-mounted machines with normal normal.
- G-force: 150 to 200.
- Spin speed between 505 and 762 rpm.
- Drum and envelope in AISI-304 stainless steel.
- External construction in aesthetic stainless steel skinplate.
- Installation on concrete plinth and metal base (optional mounting base).
- 7" Touch Plus Control.
- 3 water inlets.
- 8 liquid dosing signals.
- **FagorKonnect** - Standard IoT connectivity.
- Energy savings in the drying process due to high water extraction (final residual moisture of 65%).



Touch Plus Control

- Intuitive**and fully programmable** 7" touch screen **microprocessor.**
- USB Connection. Of charge for programming, telemetry, data analysis...
- **FagorKonnect** - free standard connectivity.
- **On-screen videos**: announcements, instructions (useful for self-service).
- **37 languages.**
- **Ready for Wet Cleaning.**
- **8 standard dosing signals** + 6 optional extra dosing signals.



G-force

- Largest G-force on the market.
  - Washers model "LN" G-force 200/150
  - Washers model "LA" G-force 500/450/350
- **Reduction of water retention** in clothing.
- **Reduced drying times.**
- **Reduced operating costs**, energy savings.



Versatility

- MADE TO MEASURE
  New possibility to customise the machines from the factory with available options.
- INDUSTRIAL OPL < > SELF-SERVICE
  The same model can be easily transformed by means of a coin/token kit.
- ELECTRIC < > HOT WATER
  Electric model easily converted to hot water.
- DRAIN VALVE < > PUMP
  Standard model easily convertible.
  Easy access and service.
- WET CLEANING
  The washers are fully configured to use Wet Cleaning programmes.
- PLINTH FOR MOPS
- MULTI-VOLTAGE
  All washers are 50-60 Hz.
- WATER RECIRCULATION
  Recirculation of wash water (optional).

Connectivity

FagorKonnect Laundry

Free standard remote communication

- **Remote technical support**
  Machine monitoring, error reporting, management, telemetry and statistics. Remote desktop and data retrieval for after-sales service, software, etc…
- **Laundry management:**
  OPL and self-service: the IoT solution allows you to manage your laundry (create customer discount programmes, view statistics, telemetry and monitor the business).
- **Remote payment**:
  APP for payments, QR Code payments, promotions and machine booking.

Efficiency

- **Saving water**: Standard Water Savings.
  Possibility to set 3 levels of savings.
- **Automatic setting of water and detergent consumption by load**:
  - Standard intelligent weighing system.
  - Standard optimum load: manual load weight display.
  - Automatic weighing system by sensors (optional).
- **Prepared for connection to a water recovery tank** (WREC models).
- **Low water consumption**
  The standard wash programme consumes less than 8.2 litres of water per kilo per cycle.
- **G-force 500/450** on high-speed models.
  Reduced residual moisture <> Reduced drying time.

Ergonomics

- **The largest door diameters on the market.**
  Useful for loading and unloading laundry, especially in large-capacity washers.
- **Easy to open and close the doo.**
- **Plinths for 11, 14, 18, 22, 28, 35 and 45 kg models.**
  For levelling loading height (door base at 850 mm).

Maintenance

- **Hinged panel**
  Easy, ergonomic access to the panel.
- **Equivalent parts**
  Many key parts are the same for all models (contactors, electronic parts, motor...).
- **Easy access to components for serviceability**
- **Technical menu**: telemetry, error diagnosis, monitoring of the machines, software updates...

Touch Plus Control

Touch Plus Control

The Touch Plus Control offers great flexibility to the user thanks to its numerous features: easy programming, 7-inch full colour touch screen, 37 languages available, USB port for updates and the same control system for OPL (industrial use) washers and self-service washers.

Programmable

All our washers are equipped with a versatile and easy to use touch-screen programming system with 20 preset programmes. These programs can be modified during operation. What is more, you can create, export and import any of the new programs by USB or remote connection.





Connectivity

FagorKonnect Laundry

FagorKonnect is our new Connected Laundry IoT solution. A multi-platform and flexible cloud-based application that allows you to manage your laundry from your pocket. No matter how many machines you have, this solution offers several practical possibilities.

Dosing

Dosing with the necessary amount at the correct time provides you with security during the process and uniformity in the result. And most importantly: your peace of mind. 8 dosage signals as standard + 6 extra signals (time of dosage, start delay, start selection) in all models.



Advertising

The Touch Plus Control screen offers the possibility of an innovative use that increases income prospects for both self-service laundries and individuals: advertising. You can now include information on timetables and prices on the washer itself, as well as the service on offer and commercial messages from third parties. All this in an attractive and eye-catching manner.

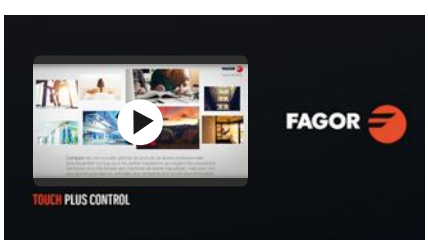

G-force

High G-force: the most efficient spinning

Fagor Professional washers have the highest G-force on the market. This has a number of advantages, water retention in the garments and reduced drying times. In conclusion, operating costs are reduced and energy is saved.

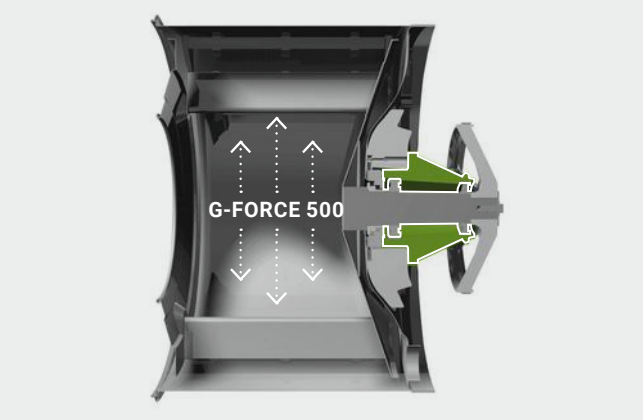

Washer LN		Washer LA
G-force 200		G-force 500
LOW		HIGH
200		500
65% HR		44% HR
Drying time		
45 min. +20 min.	50% reduction of drying time	25 min.
Energy consumption	50% reduction of energy cost	

Medium bed sheet
100% cotton
6-minutes spin

Efficiency

Technological innovations for a sustainable machine

Water

One of our objectives, we don't allow ourselves to waste it. That's why we offer washers with optimised design and programming with a unique accessory, the WREC (water recovery tank).

Energy

Energy optimisation is key in a laundry. With this in mind, our machines have been designed to save energy.

Chemicals

We design our washers with features that facilitate and ensure the most economical use of chemicals.

Technology

We apply the latest technology to offer the most efficient machines possible.



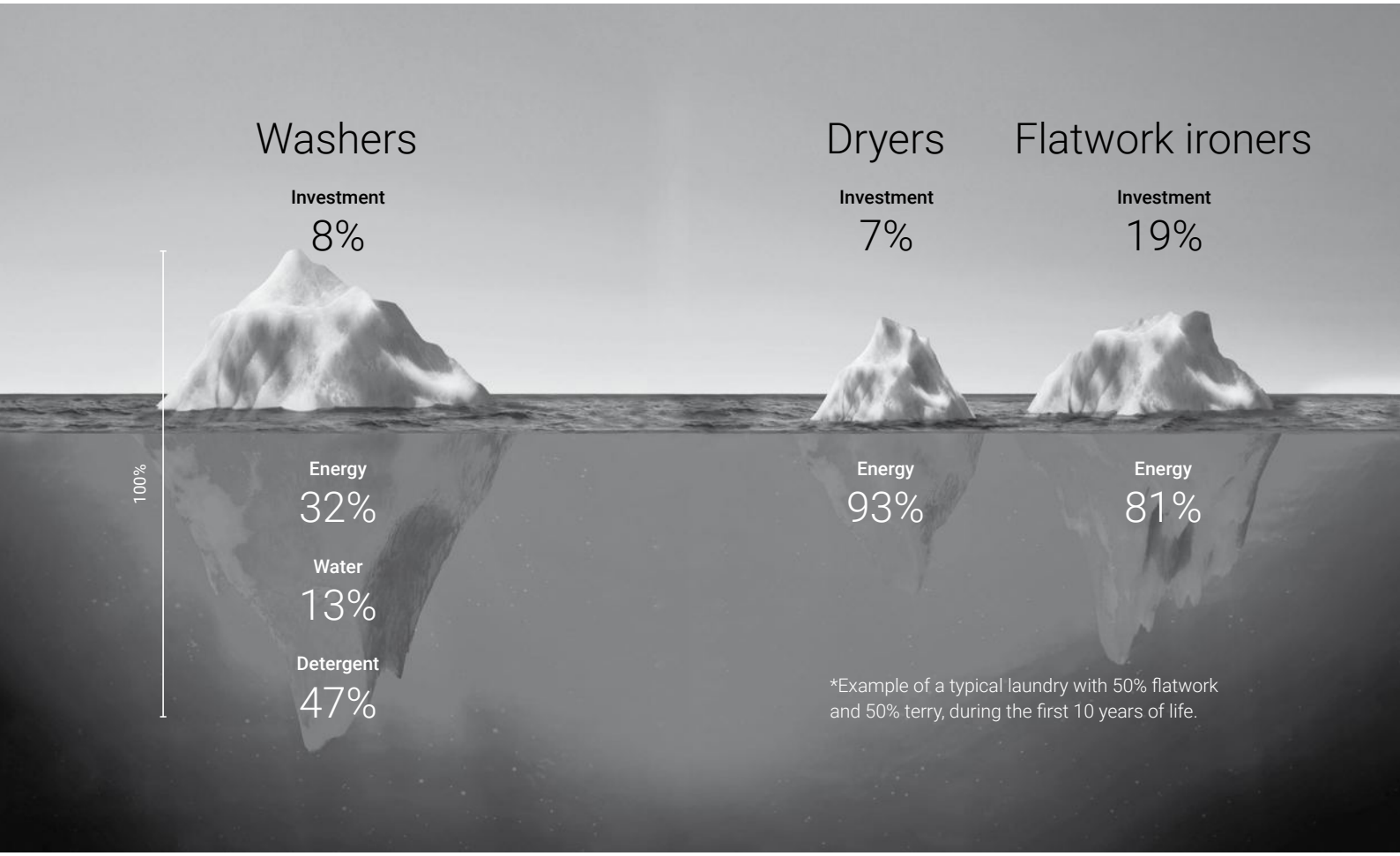

Optimum load

Thanks to the advanced technological development of the Kare range, the machine is capable of detecting any kind of imbalance in its functioning ahead of time.

In this way, once the anomaly has been corrected, the work is carried out more gently, which extends the life of the components and reduces washing time and energy consumption.

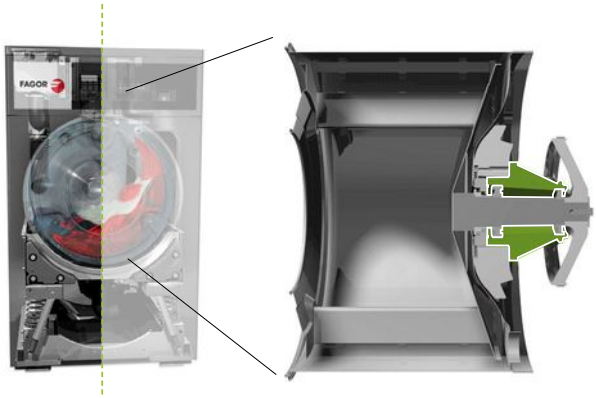

Intelligent weighing system

A system of automatic adjustment carried out by the washer itself which intelligently regulates water and detergent consumption in accordance with the load inserted.

Also offers the option of indicating the load weight manually. This reinvests in a considerable saving of energy, water and chemical products.

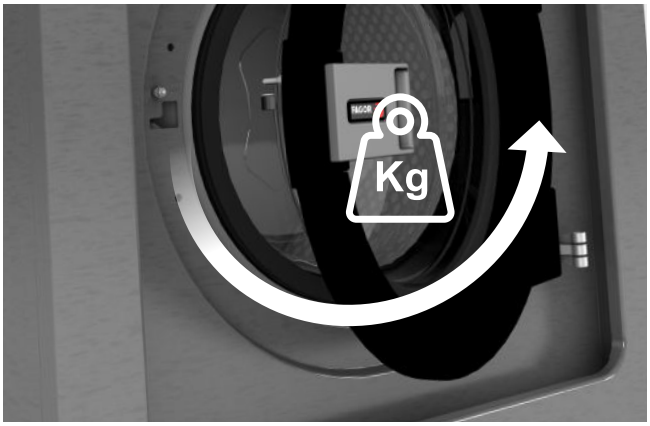

High G-force 500

Fagor Professional washers have the highest G-force on the market. This brings numerous advantages such as the reduction of water retention in the linen and of drying times. In conclusion, they reduce your operational costs and save energy.

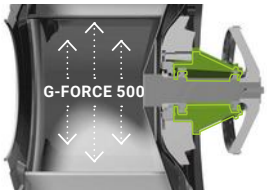

Drum design

The efficient design of the entire Kare range of washers, based on a series of perforations on the drum edges and minimal gaps between the drum and the tank, allows only the energy needed to heat the water to be consumed, as well as reducing superfluous use of chemicals.

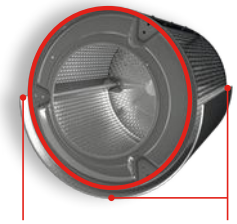

Minimal distance

Water cascade

Through a series of perforations in the paddles of the machine, a water cascade effect is achieved which enhances the mechanical action of the drum during operation and considerably reduces the amount of water needed in each wash.





Prepared for connection to water recovery tanks

Washers with Touch Plus Control TP2 control can be connected to WREC model tanks that allow water recovery, achieving significant water and energy savings

WREC-80 / WREC-150



WREC-1000

New WREC-1000 centralised tank for one or more machines, from 1 to 3 tanks of 1000 litres.





Up to
-70%
Water consumption in 3 rinses

Example without WREC-150

Example of sample programme		**28 kg washer High speed**
Prewash	**2.15l/kg**	**60.20l.**
Washing	**1.38l/kg**	**38.64l.**
Rinse 1	**1.23l/kg**	**34.44l.**
Rinse 2	**1.13l/kg**	**31.64l.**
Rinse 3	**2.31l/kg**	**64.38l.**
	Total 8.20l/kg	**Total 229.60l.**

Example with WREC-150

Water from rinse **3** goes to rinse **1** and **2**
Water from rinse **1** and **2** goes to prewash
Water from rinse **1** goes into the wash

Connectivity

A connected world, a world of benefits

FagorKonnect
Laundry

Free and easy IoT connection is standard across all ranges with Touch Plus Control.



Performance and functions

Management

- Management of programmes and washing and drying phases.
- Configurable statistics, cycles carried out, income (Coin), errors, production, production reports and water, chemical and energy consumption, workloads, etc.
- Creation of daily, weekly, etc. reports. Emailing of information and statistics.
- Telemetry: storage and access to all data and signals from the machines for later use and consultation (times, temperatures, errors, water levels, dosages, speeds, etc.). Very useful for users, technical services, chemists, etc.
- Configurations of the machines.
- Remote desktop control of the machines.
- Geolocation.

Self-service

My Laundry Time

Free proprietary app for iOS and Android. Manage the booking and payment of programmes in your laundry. It allows you to search for laundries and add them to your favourites, know the status of the machines in real time, reserve and pay for washing or drying, receive push or email alerts when the programme has finished or is about to finish, visualise your operations, receive discounts and promotions...

Technical service

- Setting up the sending of notifications and errors.
- Access to technical documentation, videos, manuals, schematics, electrical diagrams, etc.
- Management of incidents and interventions.

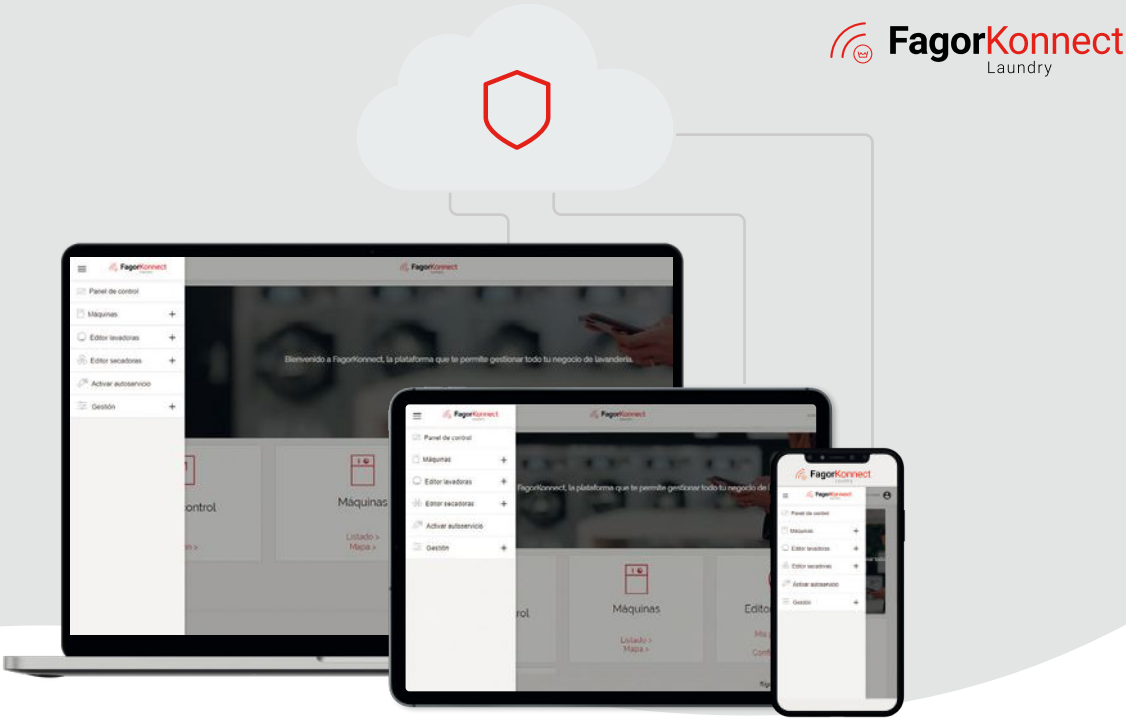

Key benefits

Owner / end user

Improves usability, efficiency and comfort.
Business control: configurable reports on production, cycles, consumption, income, etc.
Ensures washing and drying processes, guarantees hygiene and disinfection, washing quality, etc.

+ information + security + control

Telemetry
Customised graphs to track your business.

Technical service

Improved customer service.
Improved processes, more efficient and less costly, avoiding unnecessary travel.
Remote troubleshooting and maintenance programmes.
Telemetry of the programmes, complete information on all the programmes carried out.
Access to technical documents, videos, etc.

+ efficiency + support + information

SAT - trouble shooting

Distributors

Technological database for new businesses, renting, maintenance contracts, self-service, etc...
Databases of installed machines, geographical distribution, models, etc...
Greater added value of Fagor Professional machines for the customer.

+ opportunity + information + added value

Chemicals

Management and creation of washing programmes, online and offline.
Ensuring the washing and drying processes, ensuring hygiene and disinfection, washing quality, etc...
Troubleshooting and remote management.
Telemetry of the programmes, complete information on all the programmes carried out.

+ information + management + ease of use

Versatility

With you in mind

Wet cleaning

Fagor Professional offers the most flexible solution on the market to implement a Wet Cleaning solution.

The machines are versatile, with both washers and dryers providing the possibility of creating different phases by program, including all the personalised parameters required by each detergent supplier in the Wet Cleaning industry.

The business proposition is flexible, as Fagor Professional has cooperated in advance with the world's most reputable chemical companies and has pre-tested the programmes for specific detergents. You can therefore continue to cooperate with your detergent supplier: integration with the Fagor Professional washer equipment will be immediate.



Electric ↔ Steam

An electrically heated model can be easily converted into a hot water model.

FULL FLOW Recirculation

Wash water recirculation kit to enhance its use. Increases the effectiveness without mechanical action, for the best care of your linen.

- Can be activated at any stage of washing.
- Applicable to any model of washer.
- Less mechanical action of the drum.
- More water flow with chemical products.
- All the wash water is used, even the normally unused water in the drain pipe.
- Better mixing of the chemical products.
- Rapid compaction of the laundry.



OPL ↔ Self-service

The machines can be converted from OPL (industrial use) to Self Service and vice versa from the Touch Plus Control (TP2).



OPL (industrial use)



Self-service



Made to measure

The Kare generation offers the possibility of personalising the machines according to the specific needs of each client. Choose from the options available and we will deliver the machines to you with these options ready installed and tested in the factory.

Maintenance



Kare Maintenance

The design, simple and robust, has been focused on the correct positioning of each component, and on the lowest possible maintenance. It has been optimised down to the finest detail related to access, including the hinge-opening front panel which provides easy access to the control panel.



Touch Plus Control technical menu

The Touch Plus Control technical panel allows comprehensive verification of a multitude of functions: the auto-test for faults, alarms, restricted access zones and the storage of relevant information such as cycles, operation time, spin speed, etc.

Self-service washers

FagorKonnect Laundry

We care about your business

FagorKonnect
in your self-service business

- Controls collection, programmes, operation, telemetry...
- Download all data for analysis.
- Create as many pricing plans as you wish.
- Monitor the operation of your teams with statistics.
- Avoid travel.
- Build customer loyalty.
- Standard IoT connectivity.

My Laundry Time
APP available for iOS and Android



Fagor Professional's industrial washers allow easy transformation from OPL to self-service and offer different payment methods:



Coin/token

By connecting one of the two kits to the basic self-service model, the client can set payment by coins and/or tokens.



Remote payment

Machines equipped for remote communication (Ethernet). This enables programming, management and technical feedback. Multi-payment system: price updates, etc. New remote payment software for self-service laundrettes.

My Laundry Time



Kiosk - Central payment centre

The machines can be connected to a pay station to facilitate control of a single box with coins and/or cards.

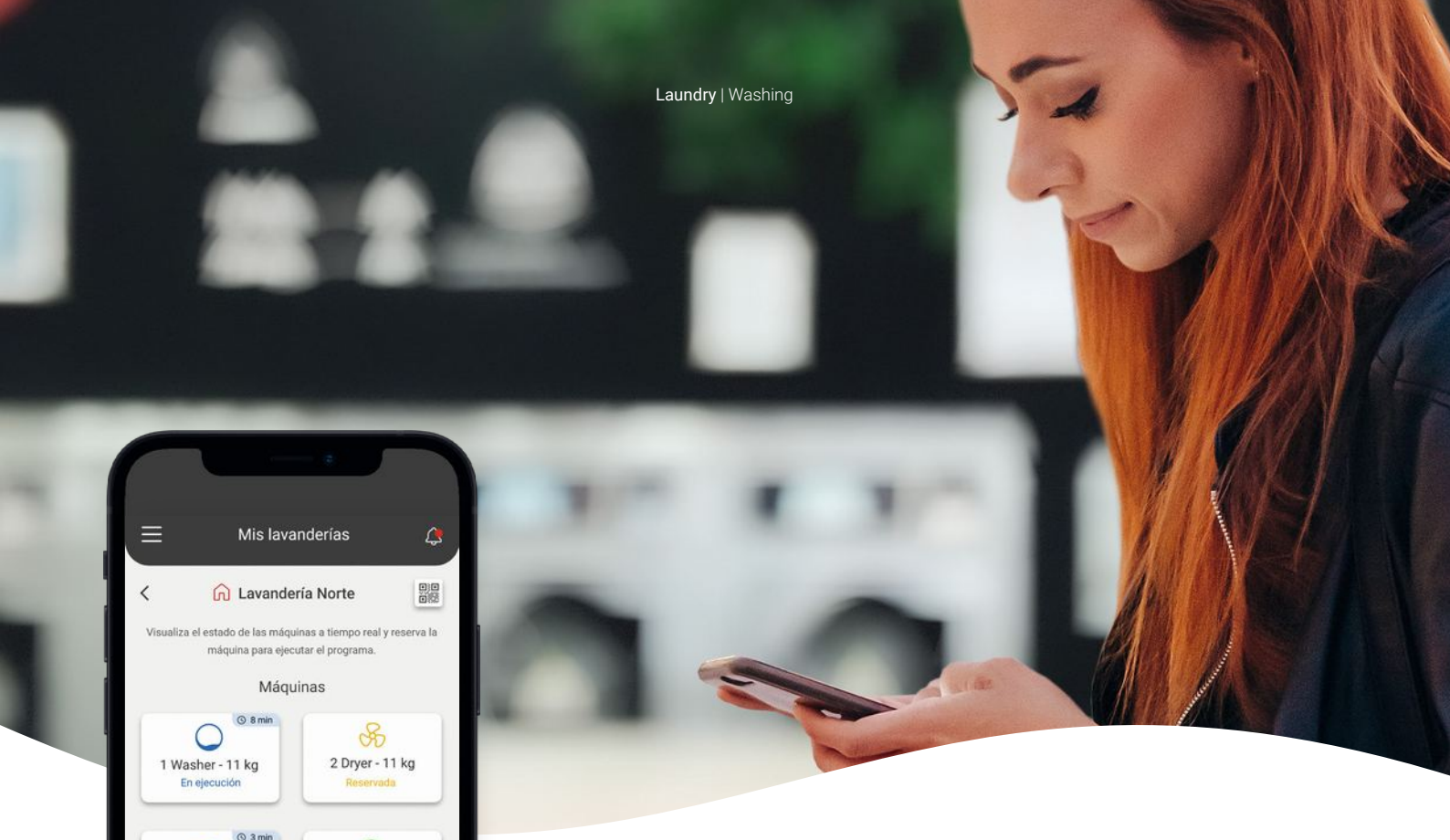

FagorKonnect in the user's palm

- Download the app.
- Locate the nearest laundry.
- Check availability and book machines.
- Pay from your mobile.
- Enjoy your free time until the notification arrives.
- Receive news and discounts.
- Monitor your activity.

My Laundry Time
APP available for iOS and Android

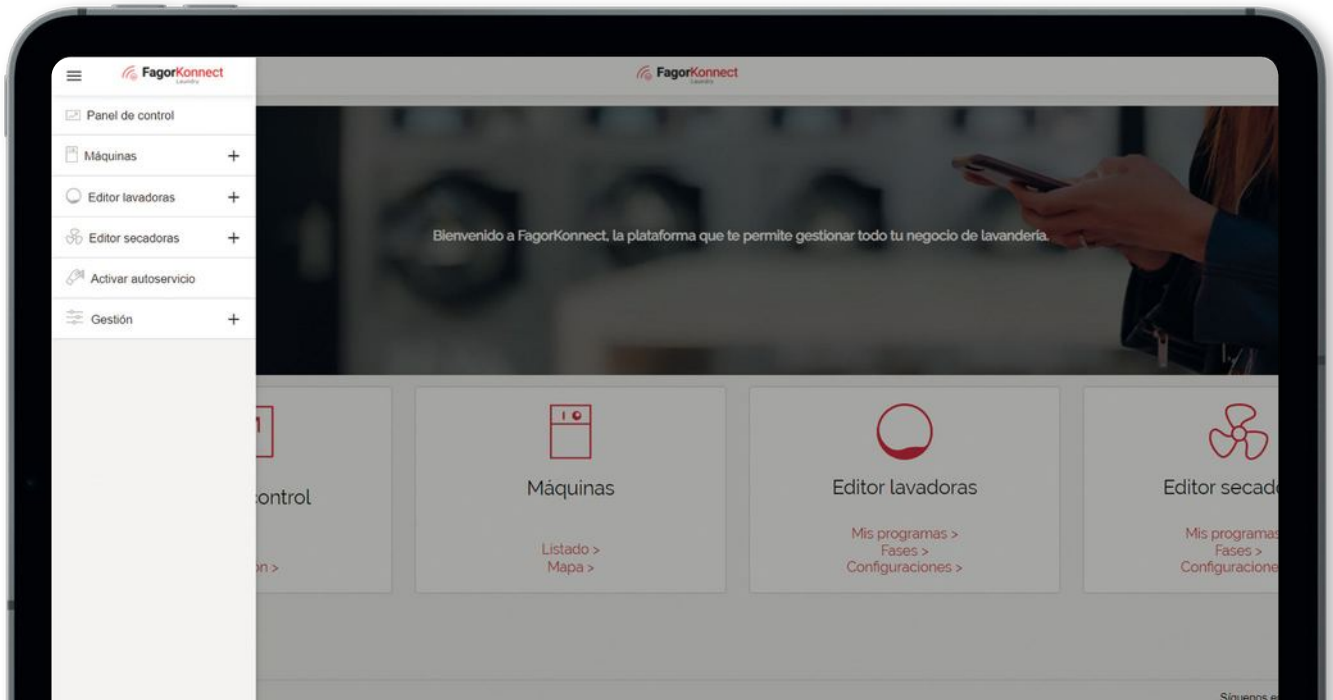

High spin speed

	LA-11 TP2	LA-14 TP2	LA-18 TP2	LA-22 TP2	LA-28 TP2	LA-35C TP2	LA-45C TP2	LA-60C TP2	LA-80C TP2	LA-100C TP2	LA-120C TP2
DRUM											
LOAD CAPACITY (kg) 1:9 / 1:10	11/10	14/13	20/18	25/22	31/28	39/35	47/42	65/59	85/77	105/95	130/115
VOLUME (L)	100	130	180	220	280	350	450	590	770	950	1.150
DIAMETER (mm)	532	620	700	700	770	860	860	1.048	1.048	1.360	1.360
DEPTH (mm)	425	430	470	560	585	602	720	680	892	637	775
GENERAL INFORMATION											
WASH SPEED / SPIN SPEED (r.p.m)	50/1.300	50/1.204	47/1.133	47/1.071	45/1.024	42.5/966	42.5/966	38/875	38/875	34/678	34/678
G-FORCE	500	500	500	450	450	450	450	450	450	350	350
NOISE LEVEL (dB)	< 70	< 70	< 70	< 70	< 70	< 70	< 70	< 70	< 70	< 70	< 70
SELF-SERVICE VERSION	Yes	Yes	Yes	Yes	Yes	Yes	No	No	No	No	No
DOUBLE DRAIN	No	Opt.	Opt.	Opt.	Opt.	Opt.	Opt.	Opt.	Opt.	Opt.	Opt.
WEIGHING SYSTEM	Opt.	Opt.	Opt.	Opt.	Opt.	Opt.	Opt.	Opt.	Opt.	Opt.	Opt.
TILT SYSTEM	No	No	No	No	No	No	Opt.	Opt.	Opt.	Opt.	Opt.
SLUICE OPTION	No	No	No	No	No	No	No	No	No	No	No
DOOR											
HEIGHT DOOR CENTRE / HEIGHT DOOR BASE (mm)	630/370	700/440	765/450	765/450	865/560	885/540	885/540	1.170/810	1.170/810	1.330/900	1.330/900
DIAMETER (mm)	373	373	460	460	460	560	560	560	560	700	700
POWER											
MOTOR (kW)	0.75	1.1	2.2	2.2	4	6	6	15	15	15	15
HEATING POWER (ELECTRIC) (kW)	6	9	12	12	18	21	21	36	48/36	-	-
TOTAL ELECTRICAL POWER (kW) (ELECTRIC MOD.)	6.25	9.4	12.75	12.75	19.2	22	22	39	51/39	-	-
ELECTRICAL POWER (HOT WATER AND STEAM MOD.) (kW)	0.75	1.1	2.2	2.2	4	6	6	15	15	15	15
CONNECTIONS											
STEAM INLET (STEAM MOD.) (inch)	1/2"	1/2"	1/2"	1/2"	3/4"	3/4"	3/4"	3/4"	3/4"	1-1/4"	1-1/4"
WATER INLET (inch)	3/4"	3/4"	3/4"	3/4"	3/4"	3/4"	3/4"	1"	1"	1-1/2"	1-1/2"
DRAIN (inch)	3"	3"	3"	3"	3"	3"	3"	3"	3"	4"	4"
DIMENSIONS											
WIDTH (mm)	692	788	884	884	979	1.095	1.095	1.420	1.420	1.836	1.836
DEPTH (mm)	830	869	913	1.003	1.080	1.184	1.304	1.433	1.645	1.710	1.832
HEIGHT (mm)	1.185	1.307	1.405	1.405	1.550	1.730	1.730	1.890	1.890	2.245	2.245
NET WEIGHT (kg)	198	236	344,5	360	524,5	735	747	1.454	1.800	2.300	2.762
DIMENSIONS WITH PACKAGING											
WIDTH (mm)	738	850	945	945	1.045	1.205	1.205	1.600	1.600	1.940	1.940
DEPTH (mm)	975	1.015	1.030	1.115	1.210	1.330	1.440	1.595	1.805	2.030	2.030
HEIGHT (mm)	1.440	1.600	1.680	1.680	1.810	1.850	1.850	1.930	1.930	2.290	2.290
GROSS WEIGHT (kg)	230	274,5	388	403,5	548,5	786	853	1.544	2.000	2.600	3.058
VOLUME (m^3)	1.03	1.38	1.63	1.77	2.28	2.7	3.3	4.9	5.6	9	9

Opt: optional

Normal spin speed

	LN-11 TP2	LN-14 TP2	LN-18 TP2	LN-22 TP2	LN-28 TP2	LN-35C TP2	LN-45C TP2	LN-60C TP2	LN-80C TP2
DRUM									
LOAD CAPACITY (kg) 1:9 / 1:10	11/10	14/13	20/18	25/22	31/28	39/35	47/42	65/59	85/77
VOLUME (L)	100	130	180	220	280	350	450	600	800
DIAMETER (mm)	620	620	700	700	770	860	860	1.048	1.048
DEPTH (mm)	330	430	470	560	585	602	720	684	936
GENERAL INFORMATION									
WASH SPEED / SPIN SPEED (r.p.m)	53/759	50/759	50/714	50/714	48/682	45/644	45/644	42.5/505	42.5/505
G-FORCE	200	200	200	200	200	200	200	150	150
NOISE LEVEL (dB)	< 70	< 70	< 70	< 70	< 70	< 70	< 70	< 70	< 70
SELF-SERVICE VERSION	Yes	Yes	Yes	Yes	Yes	Yes	Yes	Yes	Yes
DOUBLE DRAIN	No	Opt.	Opt.	Opt.	Opt.	Opt.	Opt.	Opt.	Opt.
WEIGHING SYSTEM	No	No	No	No	No	No	No	No	No
TILT SYSTEM	No	No	No	No	No	No	No	No	No
SLUICE OPTION	Yes	Yes	Yes	Yes	Yes	Yes	Yes	Yes	Yes
DOOR									
HEIGHT DOOR CENTRE / HEIGHT DOOR BASE (mm)	570 / 310	570 / 310	655 / 348	655 / 348	700 / 400	735 / 440	735 / 440	900 / 540	900 / 540
DIAMETER (mm)	373	373	460	460	460	560	560	560	560
POWER									
MOTOR (kW)	1.1	1.1	2.2	2.2	4	4	6	5.5	5.5
HEATING POWER (ELECTRIC) (kW)	6	9	12	12	18	21	21	36	48/36
TOTAL ELECTRICAL POWER (kW) (ELECTRIC MOD.)	6.25	9.5	12.75	12.75	19.2	22	22	38	50,5/38,5
ELECTRICAL POWER (HOT WATER AND STEAM MOD.) (kW)	1.1	1.1	2.2	2.2	4	4	6	5.5	7.5
CONNECTIONS									
STEAM INLET (STEAM MOD.) (inch)	1/2"	1/2"	1/2"	1/2"	3/4"	3/4"	3/4"	3/4"	3/4"
WATER INLET (inch)	3/4"	3/4"	3/4"	3/4"	3/4"	3/4"	3/4"	1"	1"
DRAIN (inch)	3"	3"	3"	3"	3"	3"	3"	3"	3"
DIMENSIONS									
WIDTH (mm)	719	719	788	788	884	979	979	1.225	1.225
DEPTH (mm)	755	856	935	1.035	1.075	1.155	1.325	1.315	1.492
HEIGHT (mm)	1.165	1.165	1.307	1.307	1.340	1.411	1.411	1.640	1.640
NET WEIGHT (kg)	198	210	272	295	403	476	600	792	871
DIMENSIONS WITH PACKAGING									
WIDTH (mm)	782	782	850	850	945	1.045	1.125	1.335	1.335
DEPTH (mm)	890	990	1.013	1.106	1.230	1.280	1.440	1.440	1660
HEIGHT (mm)	1.400	1.400	1.583	1.583	1.583	1.655	1.640	1.860	1.860
GROSS WEIGHT (kg)	231,6	245	309	335	431	510	670	878	963
VOLUME (m^3)	0.97	1.08	1.36	1.5	1.84	2.2	2.6	3.6	4.12

Opt: optional

FAGOR PROFESSIONAL

ONNERA GROUP

MONDRAGON HUMANITY AT WORK

ISO 9001

ACTIVELY SUPPORTING

Santxolopetegi auzoa, 22
20560 Oñati, Gipuzkoa (Spain)

Tel. (+34) 943 71 80 30
info.laundry@fagorprofessional.com

www.fagorprofessional.com